Notebook Series -- Notebooks by Edison
Notebook, N-17-07-25

This undated notebook was possibly used during July 1917. All of the entries are by Edison. Some pertain to his work for the U.S. Navy during World War I, while others relate to ongoing efforts to improve the surface quality of Edison disc records. Included are lists of possible smoke and fog generating methods for use by merchant ships at sea, along with drawings of possible submarine or torpedo detection devices. Additional entries directed to William W. Dinwiddie propose experiments on the construction of powder blanks for disc records. Inserted into the book are three loose reports by J. Miller, giving the results of tests with experimental disc records. The reports probably relate to experiments described in N-17-07-15 and other Disc Record Books (Notebooks by Edison and Other Experimenters). The pages are unnumbered. Only 15 pages have been used.

73498

Home Co.,
STATIONERS,
JOHN ST.
AND
PLATT ST.

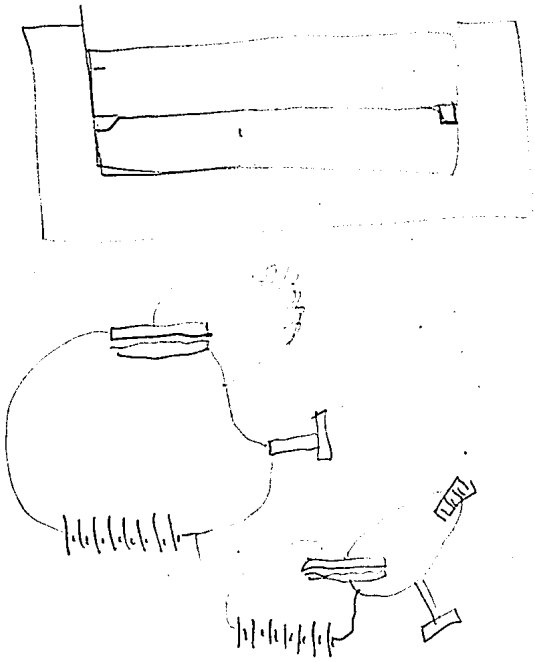

Zinc dust mixed with something that will itself burn & carry off the white Zinc as smoke —

See price of metallic Calcium — ditto sodium to make smoke —

See price of solid SO_3 for smoke —

Rig up with steam ditto compressed air & force Rosin & other powders through nitric acid to make a smoke

Smothered burning of saw dust — wood etc

Burn Rosin — Wood tar, wood pitch

Distill sulphur Vapor come off & Condensers to amorphous

Atomizing ferrous Chl & H_2S also other salts. to get black smoke

H_2S. burned with air (controlled) & combines with the H giving finely divided sulphur

Heat Sulphuric acid till it decomposes gives fumes

Solid SO_3 kept for some time opaque solid & heating doesn't melt but volatilizes

Vapor of SO_3 forms dense white fumes — which are nearly droplets of H_2SO_4

40% of SO_3 mixed is solid at ordinary temp + only liquid by gently warming

White phosphorus heated with a Caustic Soda Solution gives off Spontaneously inflam PH_3

Silicon Hydride —
SiH_4 – ignites spontaneously
gives smoke of SiO_2

Phosphorus trichloride
fumes in air

Sulphur Chloride fumes

Phos pentachloride fumes
very strongly

Phos Oxychloride fumes strongly

Silicon Chloride fumes strongly

Atomizer mix of $FeCl_2$ & $FeCl_3$
to form black oxide & at same
time a spray of soda solution

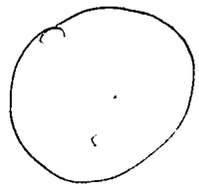

2000

Atomize oil with steam
if get right kind of oil of
very little vapor tension so it
will not evaporate it will
coat the water particle & prevent
water from evaporating & thus
make a permanent fog

Perhaps a solid like Naphthalene
Rosin dissolved in the oil or
no oil & then substance melted
forcing superheated steam
through the liquid solid being
higher temp than the steam
will carry it along — or
the solid giving off vapor
these will mix with steam

4 precipitate, coal tar
Naphthalene, Rosin, Sulphur
+ higher percentage than 11% of
Sulphur, (Sulphur cheapest)
if it will work — atomizer Soap solution
Rosin soap + HCl, or H_2SO_4 – Tragellum,

Get address 11% atomizer
oil burner atomizers & all
information,

Put chemist probably on a
bomb thinner for smoke
bombs for Merchant ships
(1a) the propellant people

Dumoulin -

1/3rd load - Nail scraper
another 1/3 "
final 1/3 "
Each scraper has shorter nails -

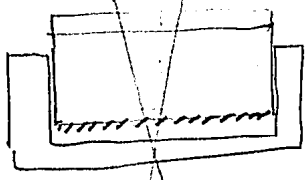

Screen - rotated & filled with weighed amount powder & reciprocated up and down while rotated & at same time is gradually withdrawn to smooth off level (10) screen before rotating

possible raped up & down & gradual withdrawal.

See Dumoulin about several types of loaders. Not 1 along best device seen & get them check - Once you had hard edge then acted as a ring to prevent cracking you must get it again - Load 1/2 - scrape then load other 1/2 - scrape - Can load from Bags using scrap & 3 men can load no hopper - if then grind large scrape 3 times.

~~Defect~~

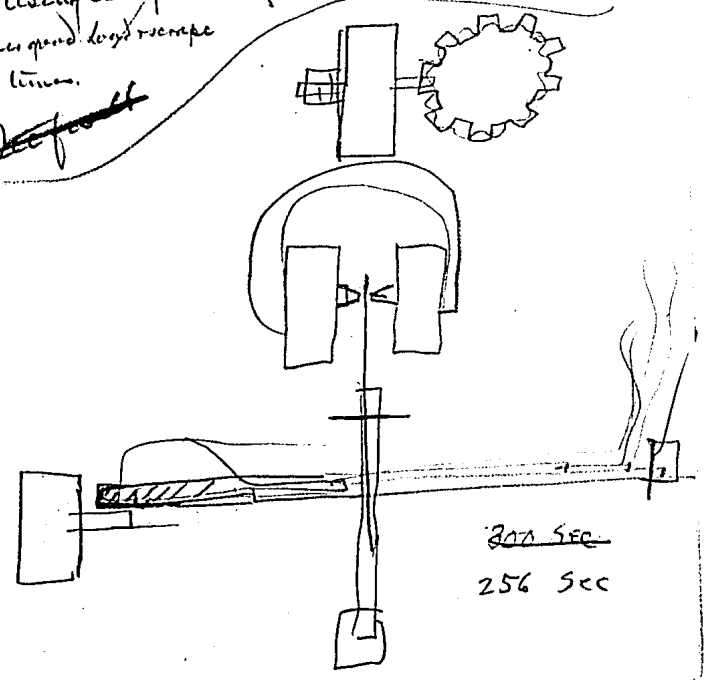

~~200 Sec~~
256 Sec

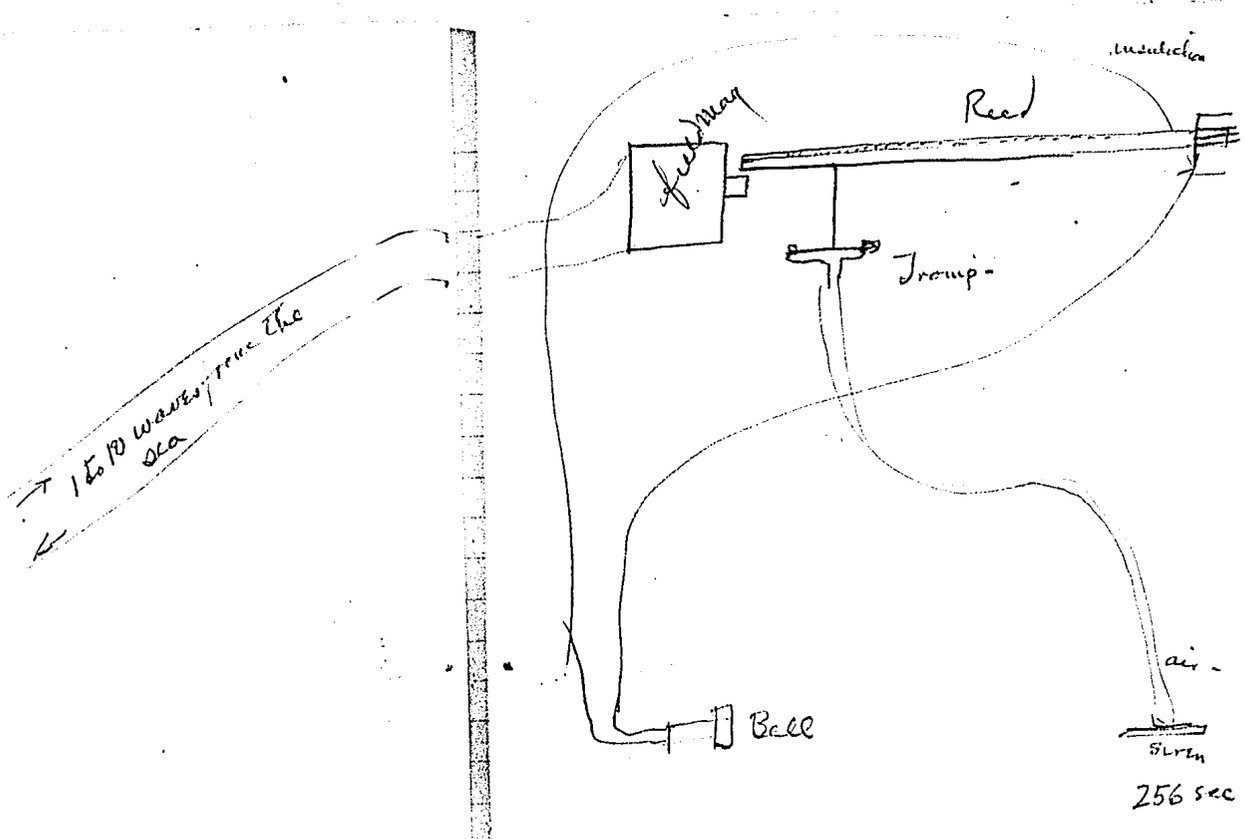

Reed vibrates a loop between the poles of the field mag — then can hear the 1 waves,

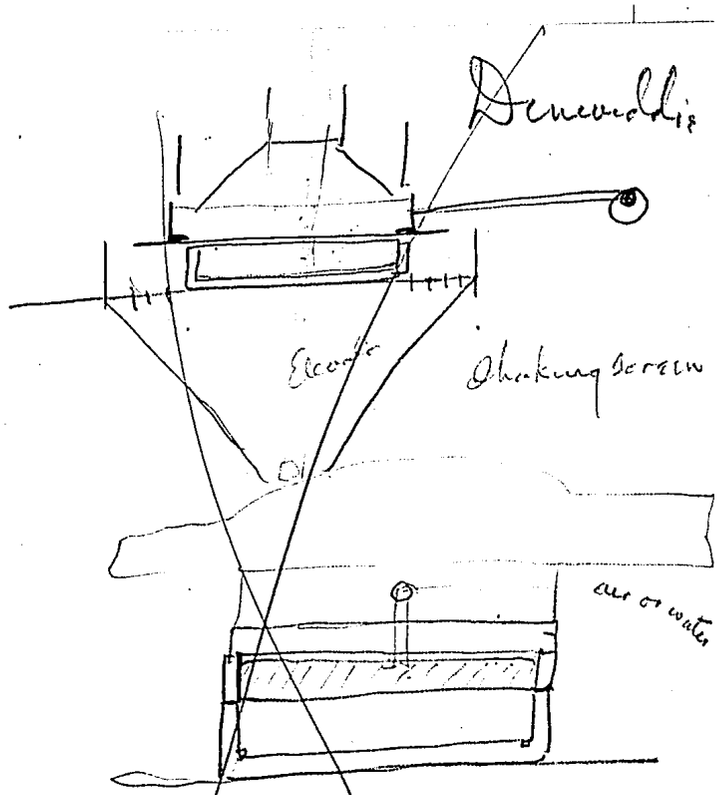

Use inner tube but twice as thick —

If by nation then, they would
Exhaust battery of a 3/4"
Shot put on her

Fill 1/2 Rubber press them
1/2 again + rubber press

Take powder Mix 3%
Strain oil — ditto
5% — + wax —

fog —

Perhaps atomized particles
should be charged Electrically
or vice versa atomizer grounded
+ give potential of the Earth

Try the white phosphor
with Soda heated + see
just what they do now

Find out if water pumps
on locomotives are worked
by Motor or how if by
Motor Could they work them
by gas or connection with Diesel Eng

Dimroddie

Mix powder in Mixer
with 1% H_2O —
2% —
3% —
5% —
to destroy elasticity of fibre
while being moulded

Put a Medalle plate
polished to make 2
thin blanks Each time
use 2 to print,

[ITEMS(S) FOUND IN BOOK]

Monday. July 23 1917.

Faces tested 80.
Rejected by x 7
Rejected by Miller 7

Drop test Average 78
Average Caliper points .3261
Lowest Caliper points .311
Send to Baldwin 7,076

Remark
General Surfaces Good.

J Miller

[ITEMS(S) FOUND IN BOOK]

Tuesday July 24. 19

Faces tested 80
Rejected by X 9
Rejected by Millie 7

Drop test Average 45
Average Caliper Points .210
Lowest Caliper Points .199.3
Send to Baldwin 5,155

Remark
General Surfaces Good.

J Miller

[ITEMS(S) FOUND IN BOOK]

Wednesday. July 25 / 91

Faces tested 80
Rejected by x 6
Rejected by Miller 6

Drop test Average 81
Average Culipers Points .2149
Lowest Culipers Points .2031
Send to Baldwin 7,1,12

Remarks
General Surfaces Good

J. Miller